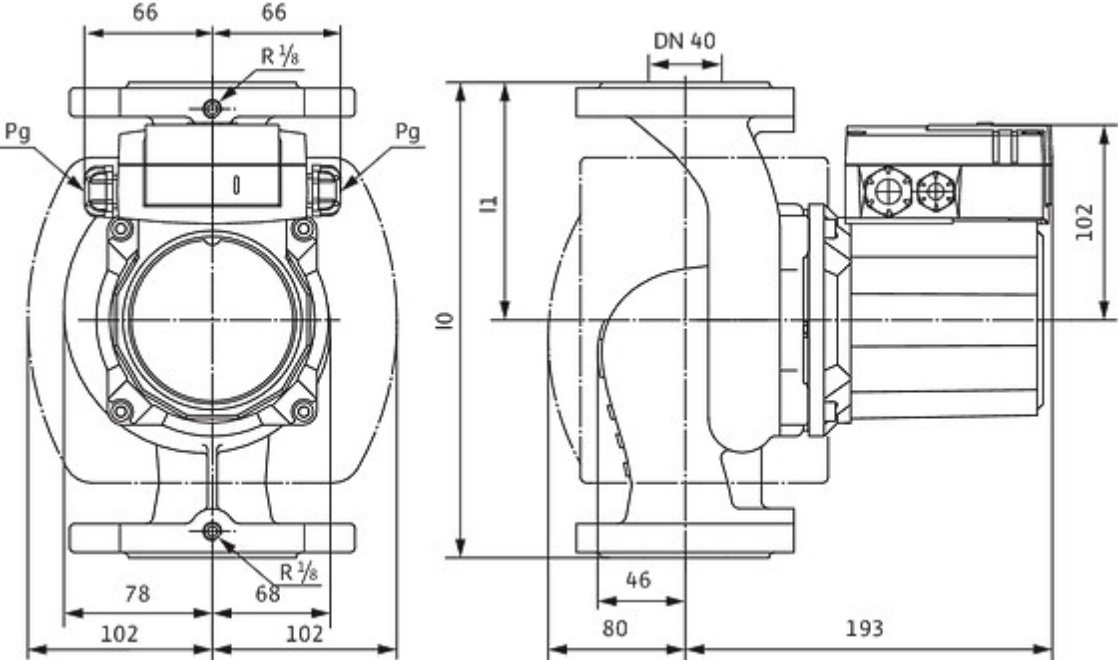
66
66
R 1/8
Pg
Pg
R 1/8
78
68
102
102
DN 40
l1
l0
102
46
80
193